Mini C

REF: SC002-A

SPOTS EN

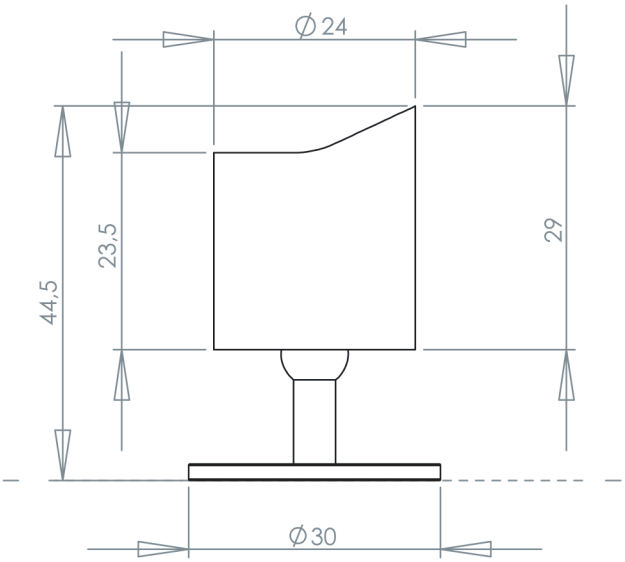

↓ PRODUCT DESCRIPTION

This minispot from the «C» range has a magnetic ball joint and provides precision lighting. It is particularly popular among commercial architects and stage designers «C» for its high efficiency and small size. It combines discreetly elegant design with a wide choice of optical characteristics, colour temperatures, and finishes, and can therefore be installed in multiple configurations.

↓ OUTPUT

2,1W

↓ LUMENS

200lm

↓ CRI

IRC90

↓ POWER SUPPLY

700mA

↓ DIMMING

1-10V | DALI | DMX | CASAMBI

↓ DEGREES

10° | 29° | 48° | ELL

↓ IP RATING

IP 40

↓ USE

↓ COLOUR TEMPERATURE

2400K | 2700K | 3000K | 3500K | 4000K | 5000K

↓ STANDARDS COMPLIANCE

EN 62471 | EN 60598-1 | EN 60598-2 | CE | ETL | III

↓ COLOURS

BK | WH | CUSTOM

LOUPI LIGHTING SYSTEMS

T : +33(0)1 49 15 99 99
E : contact@loupi.com
W : www.loupi.com

Design and manufacturing Loupi Lighting systems, all rights reserved.
Registered design and patents.
Specification subjected to change without prior notice.

Mini C

REF: SC002-A

SPOTS EN

↓ SOURCES
- **Luminous flux according to Bining: 200 lumens;**
- **Colour temperature: 2400 K to 5000 K;**
- **Service Range: 70 % of nominal flux after 25 000 hours;**
- **Colour Rendering Index: CRI 90.**

↓ OPTICAL CHARACTERISTICS
- **PMMA acrylic lens, efficiency ~90 %;**
- **Available degrees: 10°, 29°, 48° & Elliptic.**

↓ ELECTRICAL CHARACTERISTICS
- **Constant current supply: 700 mA;**
- **Supply connection: Polarised output connectors;**
- **Power consumption to 2.1W max, excluding supply.;**
- **Electrical Classification: Class III SELV device.**

↓ MECHANICAL CHARACTERISTICS
- **Articulating base, patented magnetic ball joint;**
- **Mounting on hook;**
- **Operating temperature: -5° +40°;**
- **ROHS components;**
- **Interior use only.**

↓ SPECIFICITIES
- **Electrolytic treatment available;**
- **3 years guarantee.**

↓ CLASSIFICATION

Product Ref.		SC000				
Specification			A			
Colour	Black			BK		
	White			WH		
	Chromium			CU		
	Gold			CU		
	Brushed Nickel			CU		
	RAL			CU		
Colour temperature	2400K				24	
	2700K				27	
	3000K				30	
	3500K				35	
	4000K				40	
	5000K				50	
Degrees	16°					16
	24°					24
	40°					40
	Elliptic					EL
REFERENCE		SC000 -	A -	BK -	24 -	16

LOUPI LIGHTING SYSTEMS

T : +33(0)1 49 15 99 99
E : contact@loupi.com
W : www.loupi.com

Design and manufacturing Loupi Lighting systems, all rights reserved.
Registered design and patents.
Specification subjected to change without prior notice.

Micro C
ACCESSORIES

REF: SC000-A

SPOTS EN

↓ CONNECTORS POWER SUPPLY IN 24V

ACSC000COCIRCPXX500
Piccolo circuit with sheath
heat-shrinkable for MINI C

↓ CONNECTORS INDEPENDENT CONNECTION TO BATTERIES

ACSCXXXCOPLITHXX010
Pack Lithium 10,4Ah

ACSCXXXCOCLITHXX35
Charger Pack Lithium
Charger 29,4V 3,5A

ACSCXXXCOPLITHXX26
Pack Lithium 2,6Ah

ACSCXXXCOCLITHXX06
Charger Pack Lithium
Charger 29,4V 0,6A

EUROPLUG

↓ OPTICAL ACCESSORIES

ACMMC01OPNIDABBKD12
Honeycomb MINI C
Ø 22.8mm

ACSC000OPSNOOTBKL14C
Snoot MINI C
Ø 22.8mm Lg 10mm Noir

↓ FIXATION/FINITION

ACSCXXXFIPATERBK
Surface mounted SPOT
Black (BK), White (WH), Custom (CU)

ACSCXXXFIPATERBKENCC
Recessed peg SPOT
Black (BK), White (WH), Custom (CU)

ACSD0XXFIPATLGBKC
Tall peg SPOT
Black (BK), White (WH), Custom (CU)

LOUPI LIGHTING SYSTEMS

T : +33(0)1 49 15 99 99
E : contact@loupi.com
W : www.loupi.com

Design and manufacturing Loupi Lighting systems, all rights reserved.
Registered design and patents.
Specification subjected to change without prior notice.